ES200D

SPLIT SYSTEM AIR-COOLED 20 HP DUAL CIRCUIT SEMI-HERMETIC

DIMENSIONAL DRAWINGS

EVAPORATOR SECTION - ES200D

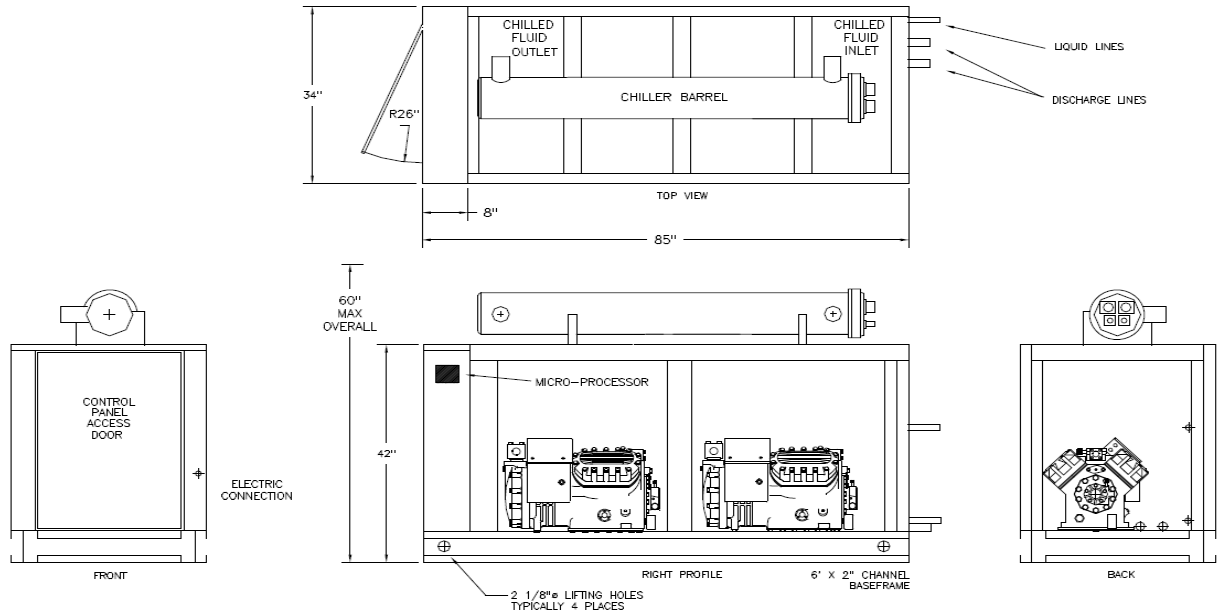

LENGTH	WIDTH	HEIGHT	WEIGHT	FLUID CONNECTIONS	R407C CONNECTIONS		R404A CONNECTIONS	
					DISCHG	LIQUID	DISCHG	LIQUID
85"	34"	60" MAX	1200 LBS	2 1/2" M-NPT	1 1/8"	5/8"	1 1/8"	5/8"

PRODUCT PERFORMANCE INFORMATION

REFRIGERANT	COMPRESSOR OPER. TEMP. SUCTION RANGE	LFT °F	80°F AMB		90°F AMB		95°F AMB		100°F AMB		105°F AMB	
			TONS	EER	TONS	EER	TONS	EER	TONS	EER	TONS	EER
R407C	10°F to 55°F	20	12.6	8.0	11.5	7.0	11.0	6.6	10.4	6.2	9.9	5.8
		35	16.9	9.5	15.8	8.4	15.2	7.9	14.6	7.4	14.0	7.0
		45	20.2	10.6	18.9	9.3	18.2	8.7	17.5	8.1	16.9	7.7
		55	23.5	11.8	21.9	10.2	21.2	9.5	20.4	8.8	19.6	8.3
		65	26.9	13.0	25.0	11.1	24.1	10.3	23.2	9.5	22.2	8.8
R404A	-10°F to 45°F	0	8.8	5.9	8.0	5.2	7.5	4.9	7.1	4.5	6.7	4.2
		10	11.1	6.8	10.1	6.0	9.6	5.6	9.1	5.2	8.6	4.9
		25	15.2	8.2	13.9	7.2	13.3	6.7	12.6	6.2	12.0	5.8
		40	19.8	9.5	18.0	8.2	17.1	7.7	16.4	7.2	15.5	6.7
		55	24.7	10.8	22.6	9.3	21.6	8.7	20.5	8.1	19.5	7.5

DRAKE REFRIGERATION INC
2900 SAMUEL DRIVE
BENSALEM, PA 19020
(888) 289-7299
www.drakechillers.com

*ALL INFORMATION ***FOR REFERENCE ONLY***

ES200D

SPLIT SYSTEM AIR-COOLED 20 HP DUAL CIRCUIT SEMI-HERMETIC

DIMENSIONAL DRAWINGS

CONDENSER SECTION - CS200D

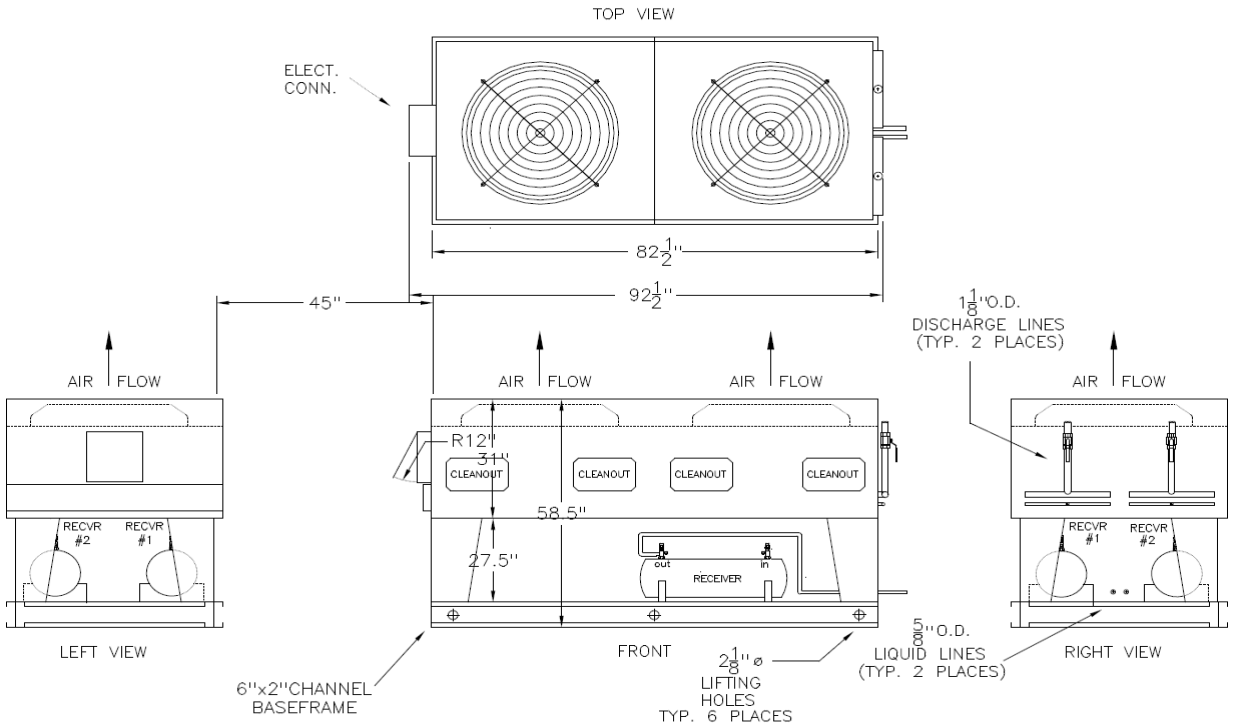

LENGTH	WIDTH	HEIGHT	WEIGHT
92.5" MAX	45"	48.5"	850 LBS

DRAKE REFRIGERATION INC
2900 SAMUEL DRIVE
BENSALEM, PA 19020
(888) 289-7299
www.drakechillers.com

*ALL INFORMATION ***FOR REFERENCE ONLY***

ES200D

SPLIT SYSTEM AIR-COOLED 20 HP DUAL CIRCUIT SEMI-HERMETIC

STANDARD FEATURES

FEATURE	BENEFIT
Listings	ETL 3046941, UL STD 1995, CAN/CSA STD, C22.2 No. 236
Microprocessor Control	Stand alone, simple, accurate control with over 10 years of field testing
Shell and Tube or Stainless Steel Brazed Plate Evaporator	Fully insulated and selected upon application requirements
Semi-Hermetic Compressor	Industry leader, rebuildable, long lasting compressor
Compressor Crankcase Heater	Prevents compressor damage caused by cold refrigerant on startup
Suction Accumulator	Protects the compressor from damage caused by liquid flood back by preventing liquid from entering the compressor
Water Flow Switch	Protects against process fluid freezing caused by fluid pump failure
Hot Gas Bypass	Aids in the prevention of evaporator freeze ups and capacity control
Copper Tube/Aluminum Fin Condenser	Rust resistant and high CFM
Painted Galvanized Steel Metal Cabinet	Sturdy, corrosion resistance, professional appearance
Insulated Process Fluid Lines	Maximum thermal efficiency
Factory Tested	Ensures the unit meets the customer's performance designed criteria and arrives in working order
Full Refrigerant Charge	Hassle free and more efficient installation
NEMA 3R Rated Electrical	Indoor/outdoor use

AVAILABLE OPTIONS

OPTIONS	AVAILABLE
Controls	BMS, BAS communications, remote access, monitoring services
Extended Warranty	4 year extended compressor warranty
Electrical	Compressor fusing, phase monitors, disconnects and more
Stainless Steel Pumps	1/3 HP to 25 HP on board pumps in multiple configurations & options
Fluid Piping Upgrades	Flow meters, pressure gauges, low flow bypass valves, and more
Coastal Protection/Hazardous Environments	Heresite coating, "Gold" and Copper condenser coils
Low Ambient Protection	Head pressure control for low ambient temperatures down to -20°F
Other	Casters, service outlets, city water add-ons, heaters, etc.
More options and customization available, contact factory for information: **(888) 289 - 7299**	

AVAILABLE MODEL NUMBER VOLTAGE REFERENCE

T3 (208-230/3/60) --- T4 (460/3/60) --- T5 (575/3/60)

PRODUCT INFORMATION

MODELS AVAILABLE		COMPRESSOR			FAN MOTOR		RLA EA	LRA EA	MCA	MOP	RECIRC. TANK
R407C	R404A	MODEL	QTY	HP	QTY	FLA EA					
ES200D3-T3-S		3DB3R12M	2	10 EA	2	2.3	43.6	215	105	145	N/A
ES200D3-T4-S						1.2	20	106	50	65	
ES200D3-T5-S						0.9	16.5	84	40	55	
ES200D6-T3-S		3DB3R12M	2	10 EA	2	2.3	43.6	215	105	145	N/A
ES200D6-T4-S						1.2	20	106	50	65	
ES200D6-T5-S						0.9	16.5	84	40	55	

DRAKE REFRIGERATION INC
2900 SAMUEL DRIVE
BENSALEM, PA 19020
(888) 289-7299
www.drakechillers.com

*ALL INFORMATION ***FOR REFERENCE ONLY***